REV.	ECN NO.	LOCATIONS	DESCRIPTION	DATE	DESIGN
A1			UPDATE PRODUCT NOTES	12/20'16	Kyle

CUSTOMER DRAWING

RoHS Compliant

ORDERING INFORMATION

TFPS - NP2 (XXT)
1 2 3

1 PRODUCT SERIES
Micro-SD connector,
push-push standard type.

2 ITEM NO.
8+1PIN, 1.8mm Height, Shell with 2 press pin.

3 GOLD PLATING
01: G/F..

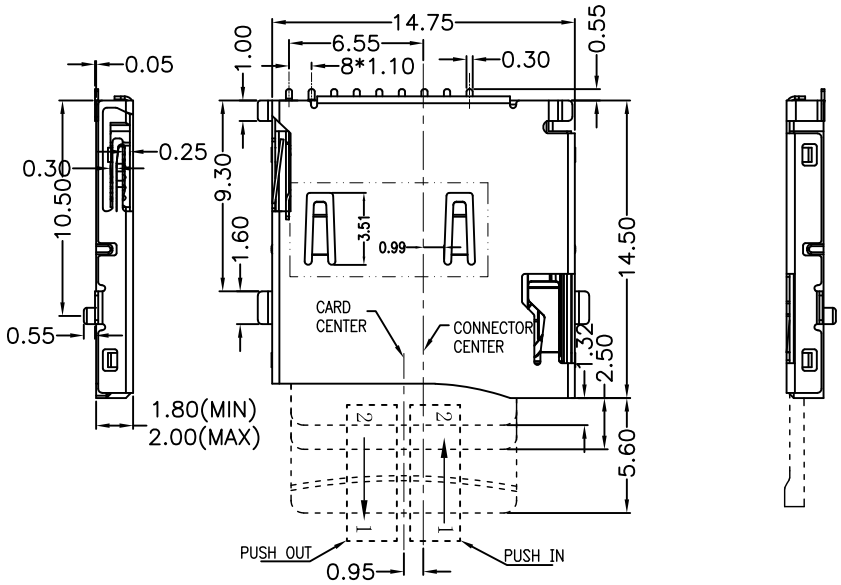

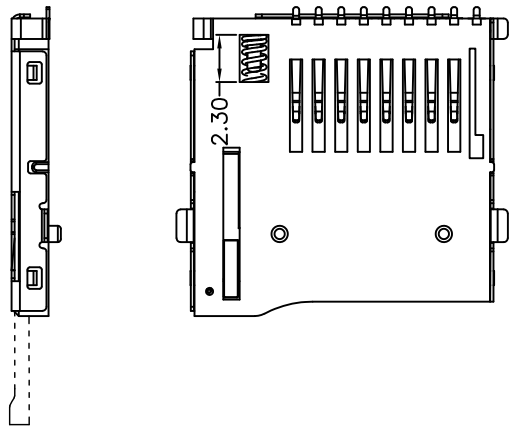

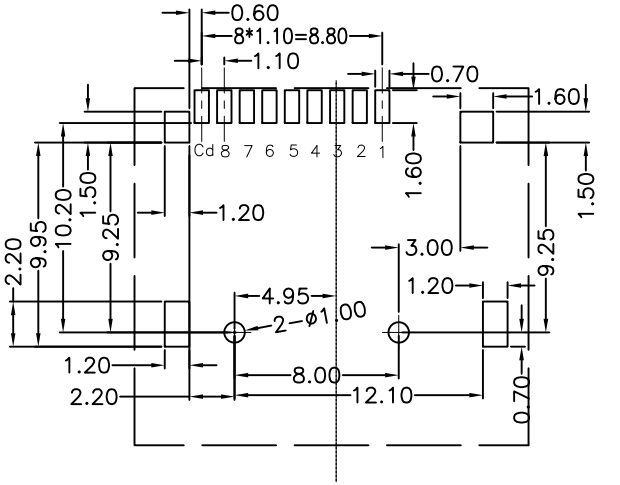

RECOMMENDED P.C.B HOLE LAYOUT
COMPONENT SIDE VIEW(TOLERANCE: +/-0.05)

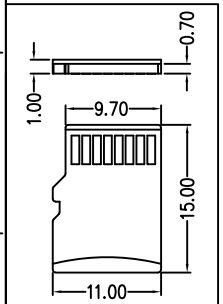

T-Flash

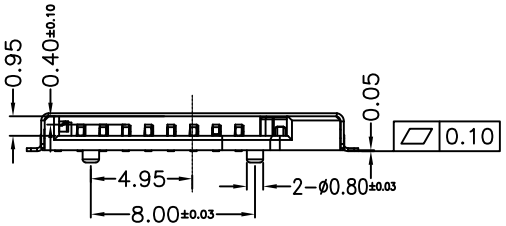

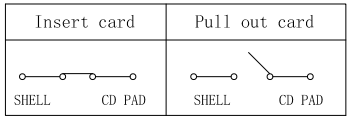

NOTES:

1. MATERIAL:
   Housing: High TEMP plastic, UL 94V-0.
   Terminal: Copper Alloy.
   Shell: Stainless Steel.
2. PLATING:
   Terminal: Nickel underplated overall. Tin plated on solder tails. Gold plated on contact area.
   Shell: Nickel underplated overall.

PIN NO.	NAME	YTPE	DESCRIPTION
1	DAT2	I/O/PP	DATE LINE(BIT2)
2	CD/DAT3	I/O/PP	CARD DETECT DATE LIN(BIT3)
3	CMD	PP	COMMAND RESPONSE
4	VDD	S	SUPPLY VOLTAGE
5	CLX	I	CLOCK
6	VSS	S	SUPPLY VOLTAGE GROUND
7	DATO	I/O/PP	DATE LINE(BITO)
8	DAT1	I/O/PP	DATE LINE(DIT1)

DIM	TOL	DIM	TOL
X.X	±0.30	X.X°	±3.0°
X.XX	±0.20	X.XX°	±2.0°
X.XXX	±0.10	X.XXX°	±1.0°

SUNFUN

SUNFUN TECHNOLOGY LTD

DRAW NO.	TFPS-NP2(A1)	DATE	MATERIAL: SEE NOTES	DRAW NAME: MICRO-SD CONNECTOR PUSH-PUSH STANDARD TYPE 8+1PIN, 1.8H, SHELL W/2 PRESS PIN
DESIGN:	Kyle	12/20'16	FINISH: SEE NOTES	
CHECK:	Kyle	12/20'16	FILE: TFPS-NP2(A1)	MODEL: T-FLASH PP CONN
REVIEW:	Jim	12/20'16	P/N: TFPS-NP2(XXT)	UNIT: mm / SHEET: 1/1
APPROVED	Jim	12/20'16	REV. A1 / SCALE	